AGAR

AGAR BOLLARD

BOLLARD

LAST UPDATE: 03-02-2026

AGAR a range of wall light and bollard with COB LED which are generally installed in the walk ways, parks and open spaces. The vandal resistant polycarbonate diffuser is available in prismatic or opal option. AGAR spreads the light evenly on walls and surfaces and at the same time provides glare free comfortable light distribution for the architectural environment as well as being an eye-catching object. Three color temperatures with a high CRI makes AGAR suitable for professional lighting application. The bollard height can be customized according to specific requirement. Version with HID lamps and E27 holder for Led retrofit lamps are also available on request. An anchorage unit is available as an accessory.

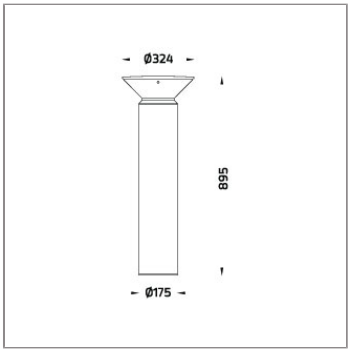

Technical Data

IP65

Ordering Code :	7123-0-3-902-XX
Lamp :	LED
CCT :	3000 K
CRI :	CRI >80
SDCM :	SDCM = 3
Lamp Lumen :	4790 lm
Luminaire Lumen :	2420 lm
Lamp Wattage :	36 W
Luminaire Wattage :	43 W
Efficacy :	56 lm/W
Ambient Temperature :	40°C
Lumen Maintenance	L70B10 >90,000 h
Controller :	On-Off
Input Voltage :	220-240Vac 50/60Hz
Net Weight :	7.12 kg.

Ordering code guide

B D
XXXX-X-X-XXX-XX
A C E

A Product Code
B Reflector
C Electrical Component
D Lamp
E Color

Icon definition

Unilamp Co., Ltd.
461 Ramintra Road, Kannayao, Bangkok 10230 Thailand
Tel : +66(0)2 943 2420-1, +66(0)2 946 4170-1
Fax : +66(0)2 943 2419
online@unilamp.co.th
www.unilamp.co.th

*Due to the constancy of product development, we reserve the right to alter all specification without prior notice.

AGAR

AGAR BOLLARD

BOLLARD

LAST UPDATE: 03-02-2026

Specification

IEC Standard	IEC 60598-1 General Requirement
	IEC 60598-2-1 Fixed Luminaires
Protection	IP65 Class II
IK Rating	Protection against mechanical impact IK08 on body and optical part.
Luminaires Body Housing	High-pressure die cast aluminum alloy body and components.
	Extruded aluminum S6063 alloy body with low copper content.
Coating Process	Nano Ceramic surface conversion, resistant to corrosive environment. Luminiare primarily coated with epoxy resin and top coated with UV stabilized polyester powder and cured in digital temperature controlled chamber at 200°C.
Diffuser	Self-extinguishing high impact resistant prismatic polycarbonate diffuser with UV stabilized additive.
Gasket	Post-cured treated silicone gasket. Temperature and weather resistant. Working temperature -40°C to +200°C.
External Screws	External screws are in stainless steel with protection grease.
Cable Entry	Cable entry protected by weather proof grommet. To be used with H05RN-F/ H07RN-F cable with 6-13mm. diameter.
Led	High efficiency LED module in COB technology. Assembled on MCPCB and mounted on to heat conductive material.
Driver	High quality constant current LED driver. Conform to safety standard and electromagnetic compatibility standard.
Internal Wire	Tinned copper conductor with silicone insulated internal wire. IMQ approved. Working temperature -40°C to +180°C.
Terminal Block	Terminal block in GFR PA6.6 for cable with cross section up to 2.5 sqmm. VDE approved.
Pre-Wire Cable	Pre-wired with 2x1.0 sqmm. H07RN-F neoprene cable. IMQ approved.
	Equipped with anti-humidity kit.
Caution	Installation work has to be carried on according to the enclosed installation manual.
Color	Black 01 Graphite 02 Dark Grey 03 Aluminum Silver 04 White 06 Corten 08

Light Distribution

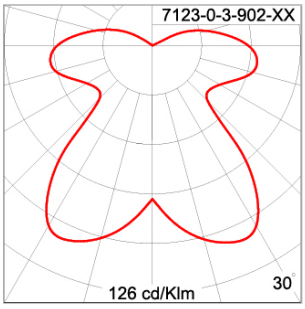

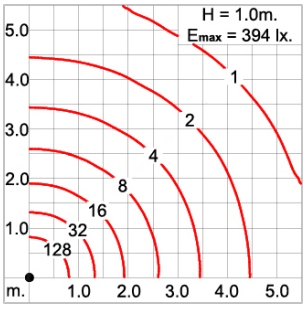

Unilamp Co., Ltd.
461 Ramintra Road, Kannayao, Bangkok 10230 Thailand
Tel : +66(0)2 943 2420-1, +66(0)2 946 4170-1
Fax : +66(0)2 943 2419
online@unilamp.co.th
www.unilamp.co.th

*Due to the constancy of product development,
we reserve the right to alter all specification
without prior notice.

AGAR

AGAR BOLLARD

BOLLARD

LAST UPDATE: 03-02-2026

Bug Report

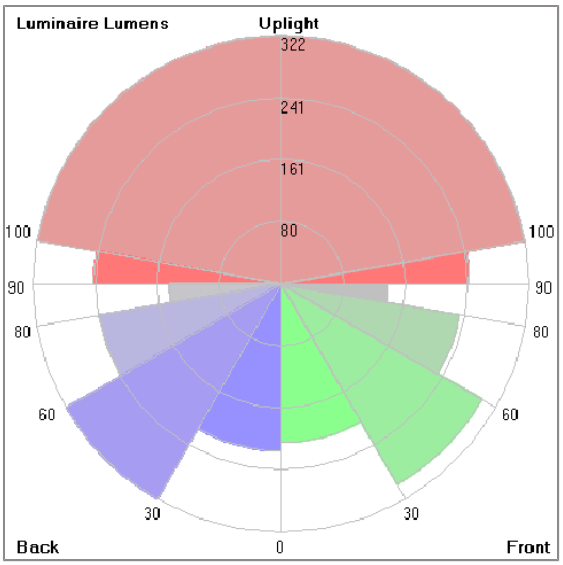

Lum. Classification System (LCS)

LCS	Zone	%Lumens	%Lamp	%Lum
FL	(0-30)	206.1	4.3	8.7
FM	(30-60)	299.9	6.3	12.7
FH	(60-80)	234.1	4.9	9.9
FVH	(80-90)	137.0	2.9	5.8
BL	(0-30)	216.7	4.5	9.2
BM	(30-60)	321.6	6.7	13.6
BH	(60-80)	238.8	5.0	10.1
BVH	(80-90)	144.6	3.0	6.1
UL	(90-100)	243.1	5.1	10.3
UH	(100-180)	320.0	6.7	13.5
Total		2361.9	49.4	100.0
BUG Rating		B1-U3-G2		

*Due to the constancy of product development,
we reserve the right to alter all specification
without prior notice.

Unilamp Co., Ltd.
461 Ramintra Road, Kannayao, Bangkok 10230 Thailand
Tel : +66(0)2 943 2420-1, +66(0)2 946 4170-1
Fax : +66(0)2 943 2419
online@unilamp.co.th
www.unilamp.co.th

AGAR

AGAR BOLLARD

BOLLARD

LAST UPDATE: 03-02-2026

Accessories

Ordering Code:
AUN-CON-0009-00
IP68 connection device, cable diameter 5-9.5mm, On-Off

Ordering Code:
AUN-CON-0010-00
IP68 connection device 3 pole, cable diameter 5-9.5mm, with distribution block

Ordering Code:
AUN-CON-0013-00
IP68 connection device, cable diameter 7-11.5mm, On-Off

Ordering Code:
AUN-ACB-0001-00
Anchor bolt kit, bollard

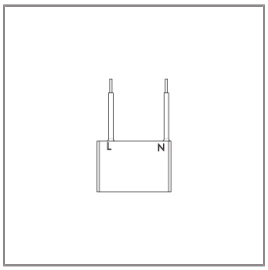

Ordering Code:
AUN-SUR-0004-00
Surge protection, 10kV, On-Off, pre-assembly from factory

Unilamp Co., Ltd.
461 Ramintra Road, Kannayao, Bangkok 10230 Thailand
Tel : +66(0)2 943 2420-1, +66(0)2 946 4170-1
Fax : +66(0)2 943 2419
online@unilamp.co.th
www.unilamp.co.th

*Due to the constancy of product development, we reserve the right to alter all specification without prior notice.