# AGAR

## AGAR BOLLARD

### BOLLARD

LAST UPDATE: 03-02-2026

AGAR a range of wall light and bollard with COB LED which are generally installed in the walk ways, parks and open spaces. The vandal resistant polycarbonate diffuser is available in prismatic or opal option. AGAR spreads the light evenly on walls and surfaces and at the same time provides glare free comfortable light distribution for the architectural environment as well as being an eye-catching object. Three color temperatures with a high CRI makes AGAR suitable for professional lighting application. The bollard height can be customized according to specific requirement. Version with HID lamps and E27 holder for Led retrofit lamps are also available on request. An anchorage unit is available as an accessory.

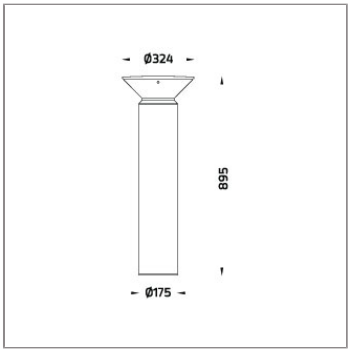


## Technical Data

IP65

| | |
|---|---|
| Ordering Code : | 7123-0-3-905-XX |
| Lamp : | LED |
| CCT : | 4000 K |
| CRI : | CRI >80 |
| SDCM : | SDCM = 3 |
| Lamp Lumen : | 4920 lm |
| Luminaire Lumen : | 2490 lm |
| Lamp Wattage : | 36 W |
| Luminaire Wattage : | 43 W |
| Efficacy : | 57 lm/W |
| Ambient Temperature : | 40°C |
| Lumen Maintenance | L70B10 >90,000 h |
| Controller : | On-Off |
| Input Voltage : | 220-240Vac 50/60Hz |
| Net Weight : | 7.12 kg. |

Ordering code guide

B D
XXXX-X-X-XXX-XX
A C E

A Product Code
B Reflector
C Electrical Component
D Lamp
E Color

Icon definition

Unilamp Co., Ltd.
461 Ramintra Road, Kannayao, Bangkok 10230 Thailand
Tel : +66(0)2 943 2420-1, +66(0)2 946 4170-1
Fax : +66(0)2 943 2419
online@unilamp.co.th
www.unilamp.co.th

*Due to the constancy of product development, we reserve the right to alter all specification without prior notice.

# AGAR

## AGAR BOLLARD

### BOLLARD

LAST UPDATE: 03-02-2026

## Specification

| | |
|---|---|
| IEC Standard | IEC 60598-1 General Requirement |
| | IEC 60598-2-1 Fixed Luminaires |
| Protection | IP65 Class II |
| IK Rating | Protection against mechanical impact IK08 on body and optical part. |
| Luminaires Body Housing | High-pressure die cast aluminum alloy body and components. |
| | Extruded aluminum S6063 alloy body with low copper content. |
| Coating Process | Nano Ceramic surface conversion, resistant to corrosive environment. Luminiare primarily coated with epoxy resin and top coated with UV stabilized polyester powder and cured in digital temperature controlled chamber at 200°C. |
| Diffuser | Self-extinguishing high impact resistant prismatic polycarbonate diffuser with UV stabilized additive. |
| Gasket | Post-cured treated silicone gasket. Temperature and weather resistant. Working temperature -40°C to +200°C. |
| External Screws | External screws are in stainless steel with protection grease. |
| Cable Entry | Cable entry protected by weather proof grommet. To be used with H05RN-F/ H07RN-F cable with 6-13mm. diameter. |
| Led | High efficiency LED module in COB technology. Assembled on MCPCB and mounted on to heat conductive material. |
| Driver | High quality constant current LED driver. Conform to safety standard and electromagnetic compatibility standard. |
| Internal Wire | Tinned copper conductor with silicone insulated internal wire. IMQ approved. Working temperature -40°C to +180°C. |
| Terminal Block | Terminal block in GFR PA6.6 for cable with cross section up to 2.5 sqmm. VDE approved. |
| Pre-Wire Cable | Pre-wired with 2x1.0 sqmm. H07RN-F neoprene cable. IMQ approved. |
| | Equipped with anti-humidity kit. |
| Caution | Installation work has to be carried on according to the enclosed installation manual. |
| Color | Black 01<br>Graphite 02<br>Dark Grey 03<br>Aluminum Silver 04<br>White 06<br>Corten 08 |

## Light Distribution

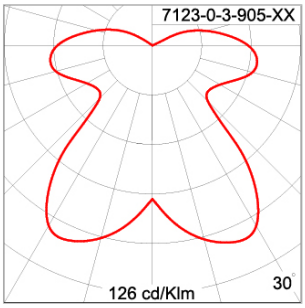


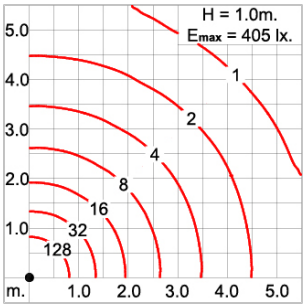


Unilamp Co., Ltd.
461 Ramintra Road, Kannayao, Bangkok 10230 Thailand
Tel : +66(0)2 943 2420-1, +66(0)2 946 4170-1
Fax : +66(0)2 943 2419
online@unilamp.co.th
www.unilamp.co.th

*Due to the constancy of product development,
we reserve the right to alter all specification
without prior notice.

# AGAR

## AGAR BOLLARD

### BOLLARD

LAST UPDATE: 03-02-2026

### Bug Report

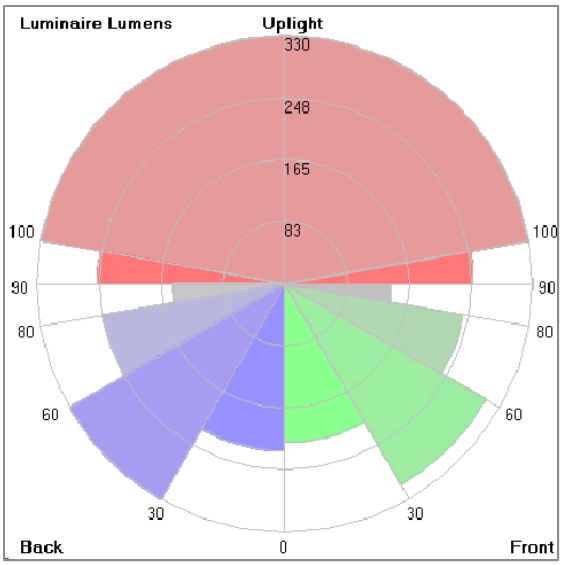


**Lum. Classification System (LCS)**

| LCS | Zone | %Lumens | %Lamp | %Lum |
|---|---|---|---|---|
| FL | (0-30) | 211.7 | 4.3 | 8.7 |
| FM | (30-60) | 307.9 | 6.3 | 12.7 |
| FH | (60-80) | 240.4 | 4.9 | 9.9 |
| FVH | (80-90) | 140.6 | 2.9 | 5.8 |
| BL | (0-30) | 222.5 | 4.5 | 9.2 |
| BM | (30-60) | 330.3 | 6.7 | 13.6 |
| BH | (60-80) | 245.2 | 5.0 | 10.1 |
| BVH | (80-90) | 148.4 | 3.0 | 6.1 |
| UL | (90-100) | 249.6 | 5.1 | 10.3 |
| UH | (100-180) | 328.5 | 6.7 | 13.5 |
| Total | | 2425.1 | 49.4 | 100.0 |
| BUG Rating | | B1-U3-G2 | | |

*Due to the constancy of product development,
we reserve the right to alter all specification
without prior notice.

Unilamp Co., Ltd.
461 Ramintra Road, Kannayao, Bangkok 10230 Thailand
Tel : +66(0)2 943 2420-1, +66(0)2 946 4170-1
Fax : +66(0)2 943 2419
online@unilamp.co.th
www.unilamp.co.th

# AGAR

## AGAR BOLLARD

### BOLLARD

LAST UPDATE: 03-02-2026

### Accessories

Ordering Code:
AUN-CON-0009-00
IP68 connection device, cable diameter 5-9.5mm, On-Off

Ordering Code:
AUN-CON-0010-00
IP68 connection device 3 pole, cable diameter 5-9.5mm, with distribution block

Ordering Code:
AUN-CON-0013-00
IP68 connection device, cable diameter 7-11.5mm, On-Off

Ordering Code:
AUN-ACB-0001-00
Anchor bolt kit, bollard

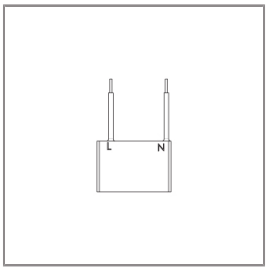


Ordering Code:
AUN-SUR-0004-00
Surge protection, 10kV, On-Off, pre-assembly from factory

Unilamp Co., Ltd.
461 Ramintra Road, Kannayao, Bangkok 10230 Thailand
Tel : +66(0)2 943 2420-1, +66(0)2 946 4170-1
Fax : +66(0)2 943 2419
online@unilamp.co.th
www.unilamp.co.th

*Due to the constancy of product development, we reserve the right to alter all specification without prior notice.