CORE

MINI CORE

CEILING RECESSED LIGHT

LAST UPDATE: 03-09-2025

Characterized by clean and clear-cut lines CORE is a family of square wall light, ceiling light, bollard and pole lights. CORE is available in two sizes and equipped with COB LED/ High Power LED in three color temperatures with exceptional color consistency. It is also available in HID version as well as with E27 holder for Led Retrofit lamps. The computer-aided-design of the parabolic reflector provides a quality light distribution. The housing is dust and water protected through the extensive engineering design and testing. CORE is recommended to illuminate columns, facades, walkways, parks and various architectural design works. The pole lights give a great level of downward light with symmetric wide beam, asymmetric forward throw or side throw light distributions.

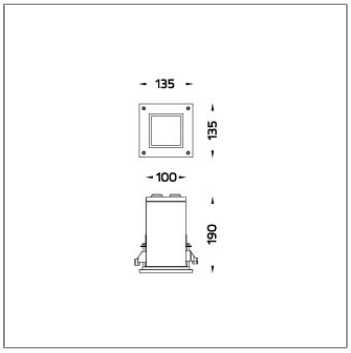

Technical Data

Ordering Code :	7332-Q-3-645-XX
Lamp :	LED
Beam :	6.2°/77°
CCT :	4000 K
CRI :	CRI >80
SDCM :	SDCM = 3
Lamp Lumen :	1590 lm
Luminaire Lumen :	300 lm
Lamp Wattage :	13 W
Luminaire Wattage :	15 W
Efficacy :	20 lm/W
Ambient Temperature :	50°C
Lumen Maintenance	L80B10 >108,000 h
Controller :	On-Off
Input Voltage :	220-240Vac 50/60Hz
Net Weight :	1.60 kg.

Ordering code guide

B D

XXXX-X-X-XXX-XX

A C E

A Product Code
B Reflector
C Electrical Component
D Lamp
E Color

Icon definition

Unilamp Co., Ltd.
461 Ramintra Road, Kannayao, Bangkok 10230 Thailand
Tel : +66(0)2 943 2420-1, +66(0)2 946 4170-1
Fax : +66(0)2 943 2419
online@unilamp.co.th
www.unilamp.co.th

*Due to the constancy of product development, we reserve the right to alter all specification without prior notice.

CORE

MINI CORE

CEILING RECESSED LIGHT

LAST UPDATE: 03-09-2025

Specification

IEC Standard	IEC 60598-1 General Requirement
	IEC 60598-2-2 Recessed Luminaires
Protection	IP65 Class I
IK Rating	Protection against mechanical impact IK10 on body and IK09 on optical part.
Luminaires Body Housing	High-pressure die cast aluminum alloy body and components.
	Extruded aluminum S6063 alloy body with low copper content.
Coating Process	Nano Ceramic surface conversion, resistant to corrosive environment. Luminiare primarily coated with epoxy resin and top coated with UV stabilized polyester powder and cured in digital temperature controlled chamber at 200°C.
Diffuser	Impact resistant safety tempered glass cover. Able to withstand the temperature up to 250°C.
Lens	Molded PC lens from renowned manufacturers in various light distribution patterns.
Gasket	Post-cured treated silicone gasket. Temperature and weather resistant. Working temperature -40°C to +200°C.
External Screws	External screws are in stainless steel with protection grease.
Cable Entry	Cable entry protected by weather proof grommet. To be used with H05RN-F/ H07RN-F cable with 6-13mm. diameter.
Led	High efficiency LED module utilized chips from world renowned manufacturer. Assembled on MCPCB and mounted on to heat conductive material.
Driver	High quality constant current LED driver. Conform to safety standard and electromagnetic compatibility standard.
Internal Wire	Tinned copper conductor with silicone insulated internal wire. IMQ approved. Working temperature -40°C to +180°C.
Terminal Block	Terminal block in GFR PA6.6 for cable with cross section up to 2.5 sqmm. VDE approved.
	Class1 luminaire provided with the earth connection.
Caution	Installation work has to be carried on according to the enclosed installation manual.
Color	Black 01 Graphite 02 Dark Grey 03 Aluminum Silver 04 White 06

Light Distribution

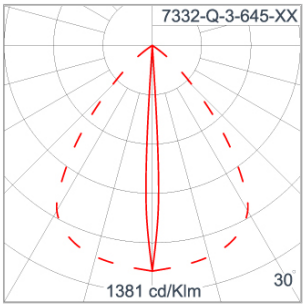

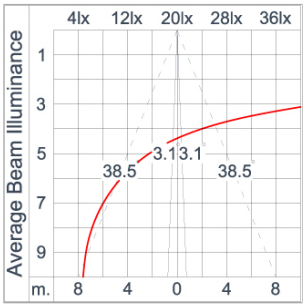

Unilamp Co., Ltd.
461 Ramintra Road, Kannayao, Bangkok 10230 Thailand
Tel : +66(0)2 943 2420-1, +66(0)2 946 4170-1
Fax : +66(0)2 943 2419
online@unilamp.co.th
www.unilamp.co.th

*Due to the constancy of product development,
we reserve the right to alter all specification
without prior notice.

CORE

MINI CORE

CEILING RECESSED LIGHT

LAST UPDATE: 03-09-2025

Bug Report

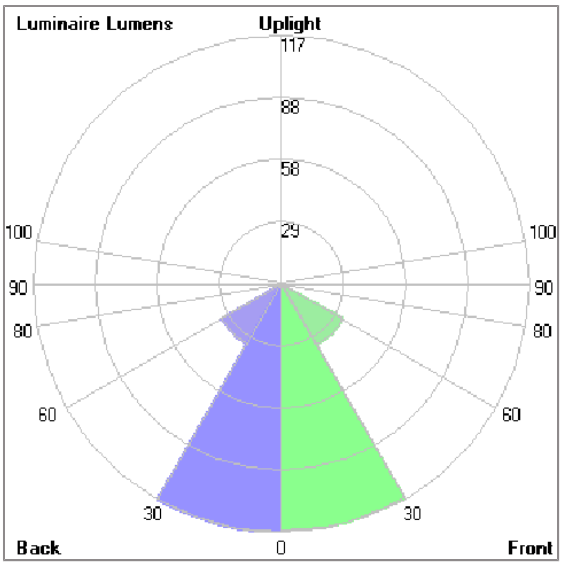

Lum. Classification System (LCS)

LCS	Zone	%Lumens	%Lamp	%Lum
FL	(0-30)	116.2	7.3	38.9
FM	(30-60)	33.2	2.1	11.1
FH	(60-80)	0.0	0.0	0.0
FVH	(80-90)	0.0	0.0	0.0
BL	(0-30)	117.0	7.4	39.1
BM	(30-60)	32.7	2.1	10.9
BH	(60-80)	0.0	0.0	0.0
BVH	(80-90)	0.0	0.0	0.0
UL	(90-100)	0.0	0.0	0.0
UH	(100-180)	0.0	0.0	0.0
Total		299.1	18.9	100.0
BUG Rating		B1-U0-G0		

*Due to the constancy of product development,
we reserve the right to alter all specification
without prior notice.

Unilamp Co., Ltd.
461 Ramintra Road, Kannayao, Bangkok 10230 Thailand
Tel : +66(0)2 943 2420-1, +66(0)2 946 4170-1
Fax : +66(0)2 943 2419
online@unilamp.co.th
www.unilamp.co.th

CORE

MINI CORE

CEILING RECESSED LIGHT

LAST UPDATE: 03-09-2025

Accessories

Ordering Code:
AUN-CAB-0002-00
Cable H07RN-F 3x1sqmm,
L= 2000, with UniBlock
anti-humidity kit,
pre-assembly from factory

Ordering Code:
AUN-CAB-0004-00
Cable H07RN-F 3x1sqmm,
L= 500, with UniBlock
anti-humidity kit,
pre-assembly from factory

*Due to the constancy of product development,
we reserve the right to alter all specification
without prior notice.

Unilamp Co., Ltd.
461 Ramintra Road, Kannayao, Bangkok 10230 Thailand
Tel : +66(0)2 943 2420-1, +66(0)2 946 4170-1
Fax : +66(0)2 943 2419
online@unilamp.co.th
www.unilamp.co.th