ARC

ARC

INGROUND LIGHT

LAST UPDATE: 20-07-2026



ARC – the adjustable walkover inground-uplighter. ARC incorporates a unique aiming mechanism that is adjustable from the outside of the fixture using a standard screwdriver or hexagon key. This key benefit means the installer doesn't need to open the luminaire or remove it from the ground for adjustment. Final commissioning and aiming are carried out while the product is still sitting in the ground block-out. The housing is enhanced LM6 aluminium, and the front cover plate comes in stainless steel. ARC offers outstanding beam quality with high contrast and precise control. The luminaire is fitted with a pre-wired supply cable for inground application and internally potted to prevent humidity and condensation.

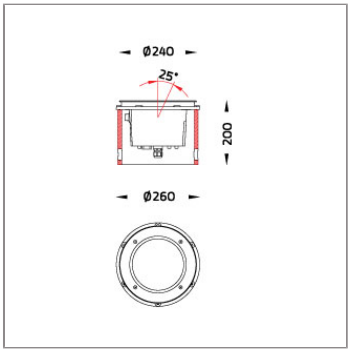

Technical Data

Ordering Code :	9060-D-5-506-91
Lamp :	LED
Beam :	53°
CCT :	2700 K
CRI :	CRI >80
SDCM :	SDCM = 3
Lamp Lumen :	2300 lm
Luminaire Lumen :	1710 lm
Lamp Wattage :	16 W
Luminaire Wattage :	19 W
Efficacy :	90 lm/W
Ambient Temperature :	50°C
Lumen Maintenance	L70B10 >90,000 h
Controller :	DALI
Input Voltage :	220-240Vac 50/60Hz
Net Weight :	5.40 kg.

Ordering code guide

B D

XXXX-X-X-XXX-XX

A C E

A Product Code
B Reflector
C Electrical Component
D Lamp
E Color

IK BODY OPTIC Icon definition

*Due to the constancy of product development, we reserve the right to alter all specification without prior notice.

Unilamp Co., Ltd.
461 Ramintra Road, Kannayao, Bangkok 10230 Thailand
Tel : +66(0)2 943 2420-1, +66(0)2 946 4170-1
Fax : +66(0)2 943 2419
online@unilamp.co.th
www.unilamp.co.th

ARC

ARC

INGROUND LIGHT

LAST UPDATE: 20-07-2026

Specification

IEC Standard	IEC 60598-1 General Requirement
	IEC 60598-2-13 Ground Recessed Luminaires
Protection	IP67 Class I
IK Rating	Protection against mechanical impact IK10 on body and optical part.
Luminaires Body Housing	High-pressure die cast aluminum alloy body and components.
	Front cover in 316 stainless steel brush finished.
	Recessed housing made of GFR polymer.
	Luminaire withstands a maximum static load of 1000 kg.
Coating Process	Nano Ceramic surface conversion, resistant to corrosive environment. Luminiare primarily coated with epoxy resin and top coated with UV stabilized polyester powder and cured in digital temperature controlled chamber at 200°C.
Diffuser	Impact resistant safety tempered glass cover. Able to withstand the temperature up to 250°C. Glass flushes to the front cover, no accumulation of dust and water.
Lens	Molded PMMA lens from renowned manufacturers in various light distribution patterns.
Adjustable Optic	Adjustable optical unit.
Gasket	Post-cured treated silicone gasket. Temperature and weather resistant. Working temperature -40°C to +200°C.
External Screws	External screws are in stainless steel with protection grease.
Cable Entry	Cable entry protected by M20 cable gland. To be used with H05RN-F/ H07RN-F cable with 7-13mm. diameter.
Led	High efficiency LED module in COB technology. Assembled on MCPCB and mounted on to heat conductive material.
Driver	High quality DALI Driver in constant current. Conform to applicable safety standards and electromagnetic compatibility.
Enhanced Protection	The luminaire is equipped with a 10kV surge protection device, the function of the protector is indicated by a LED, performance in compliance with IEC61643-11.
Internal Wire	Tinned copper conductor with silicone insulated internal wire. IMQ approved. Working temperature -40°C to +180°C.
Terminal Block	Class1 luminaire provided with the earth connection.
Pre-Wire Cable	Pre-wired with 5-core cable for power (3x1 sqmm.) and dimming signal (2x0.35 sqmm.).
Caution	Installation work has to be carried on according to the enclosed installation manual.
	The water drainage system must be tested to ensure that it is working sufficiency and efficiency.

Light Distribution

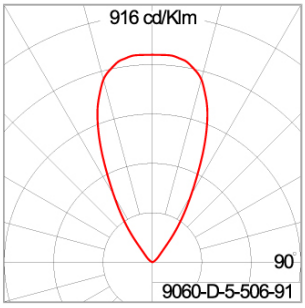

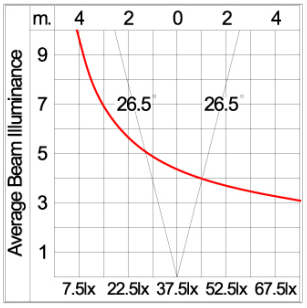

Unilamp Co., Ltd.
461 Ramintra Road, Kannayao, Bangkok 10230 Thailand
Tel : +66(0)2 943 2420-1, +66(0)2 946 4170-1
Fax : +66(0)2 943 2419
online@unilamp.co.th
www.unilamp.co.th

*Due to the constancy of product development,
we reserve the right to alter all specification
without prior notice.

ARC

ARC

INGROUND LIGHT

LAST UPDATE: 20-07-2026

Accessories

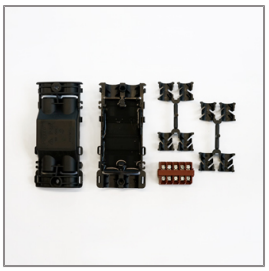

Ordering Code:
AUN-CON-0008-00
IP68 Connector, cable diameter 8-10mm, gel-filled for through wiring , 1-10V or DALI



Ordering Code:
AUN-CON-0011-00
IP68 connection device, cable diameter 7.1-13mm, 1-10V or DALI



Ordering Code:
AUN-CON-0012-00
IP68 connection device 5 pole, cable diameter 7.1-13mm, with distribution block , 1-10V or DALI



Ordering Code:
AUN-CON-0014-00
IP68 connection device, cable diameter 8-12.5mm, 1-10V or DALI

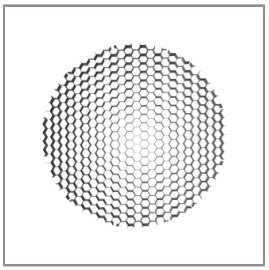

Ordering Code:
AUN-GSH-0021-00
Honeycomb louver, LED, pre-assembly from factory

*Due to the constancy of product development, we reserve the right to alter all specification without prior notice.

Unilamp Co., Ltd.
461 Ramintra Road, Kannayao, Bangkok 10230 Thailand
Tel : +66(0)2 943 2420-1, +66(0)2 946 4170-1
Fax : +66(0)2 943 2419
online@unilamp.co.th
www.unilamp.co.th