Gavalnized Steel Pole

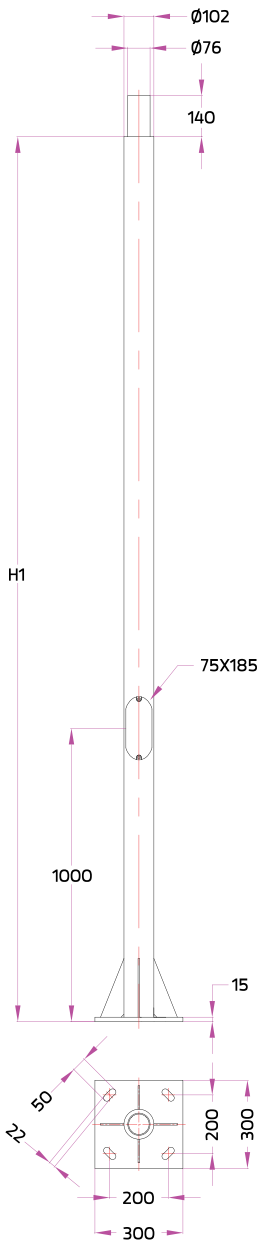

Straight Cylindical Hot-Dipped Gavalnized Steel Pole Diameter 102 mm. with Spigot Size 76 mm.

Type	Ordering Code	H1 (mm.)
16A Fuse + Prepared for dimming	AUN-POL-0012-XX	4000
	AUN-POL-0013-XX	5000
	AUN-POL-0029-XX	6000

Available colors

Black	(replace the last 2 digits of ordering code with 01)
Graphite	(replace the last 2 digits of ordering code with 02)
Dark Grey	(replace the last 2 digits of ordering code with 03)
Aluminium Silver	(replace the last 2 digits of ordering code with 04)
White	(replace the last 2 digits of ordering code with 06)
Wooden Brown	(replace the last 2 digits of ordering code with 07)

For Luminaires :

ATHLON Area Light
Single Sided / Double Sided

Small SIROCCO Area Light
Single Sided / Double Sided

Mini ANDROMEDA Area Light
Single Sided / Double Sided

Neo EQUINOX Pole Top Light
Single Sided / Double Sided

NEOS Area Light
Single Sided / Double Sided

STICK Direct
Pole Top Light

NeoPLACE
Double Headed

EPSYLON
Double Headed

Customized Pole Mounting Options :

for Mega SONIC Pole Array :

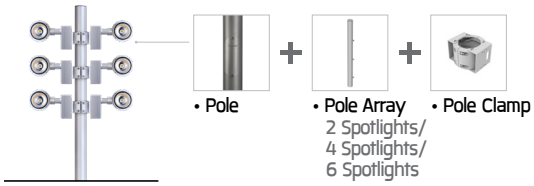

for Mega KUBIK Pole Array :

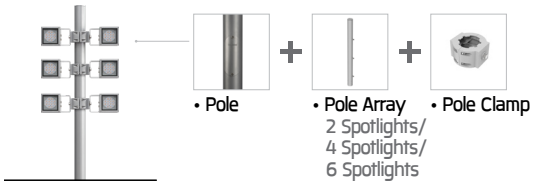

Pole Top Mount Solutions :

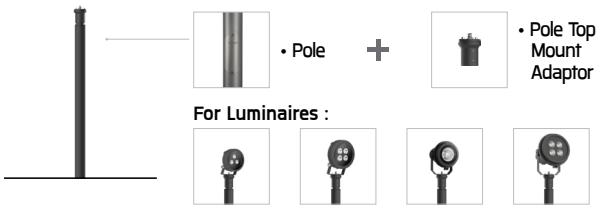

For Luminaires :

Mini SPACE

Medium SPACE

CANNON 280

CANNON 360

Anchor Bolt Kit for this pole
Ordering Code: AUN-ACB-0008-00

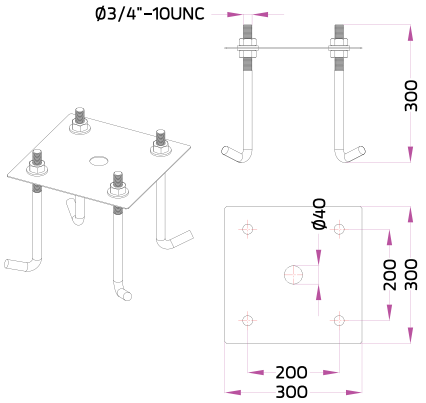

Gavalnized Steel Pole

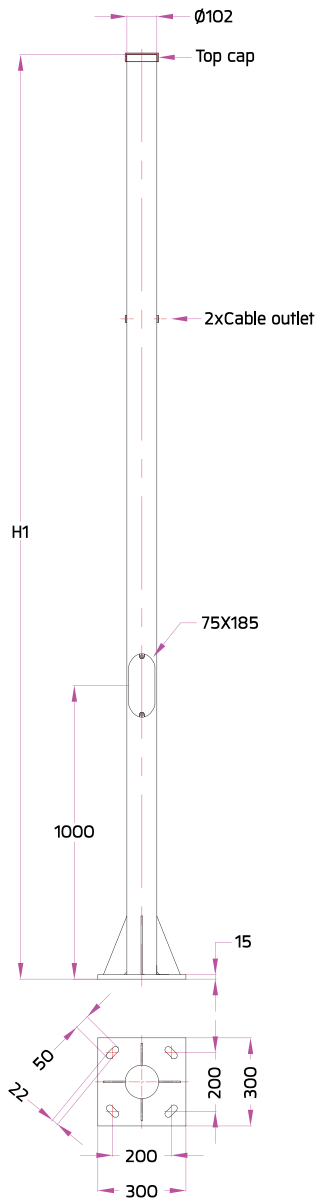

Straight Cylindical Hot-Dipped Gavalnized Steel Pole Diameter 102 mm. with Cable Outlets and Top Cap

Type	Ordering Code	H1 (mm.)
16A Fuse + Prepared for dimming	AUN-POL-0023-XX	4000
	AUN-POL-0024-XX	5000

Available colors

Black	(replace the last 2 digits of ordering code with 01)
Graphite	(replace the last 2 digits of ordering code with 02)
Dark Grey	(replace the last 2 digits of ordering code with 03)
Aluminium Silver	(replace the last 2 digits of ordering code with 04)
White	(replace the last 2 digits of ordering code with 06)
Wooden Brown	(replace the last 2 digits of ordering code with 07)

For Luminaires :

Neo EQUINOX
Pole Clamp
Single Sided /
Double Sided

Anchor Bolt Kit for this pole
Ordering Code: AUN-ACB-0008-00

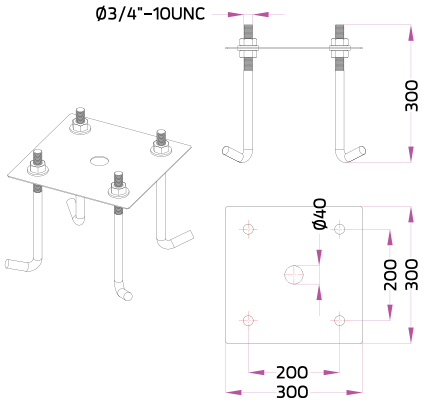

Customized Pole Mounting Options :

Option 1 :

• Pole • Pole Clamp OR • Pole Clamp for KUBIK Ground mount only

For Luminaires :

ALPHA Spotlight | SONIC Spotlight | TELESCOPE | SPOTT | FIN

KUBIK
Ground mount

Option 2 :

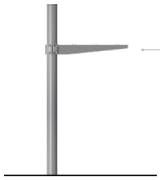

• Pole • Pole Clamp • Mounting Arm

For Luminaires :

ALPHA Spotlight | SONIC Spotlight | TELESCOPE | SPOTT | FIN